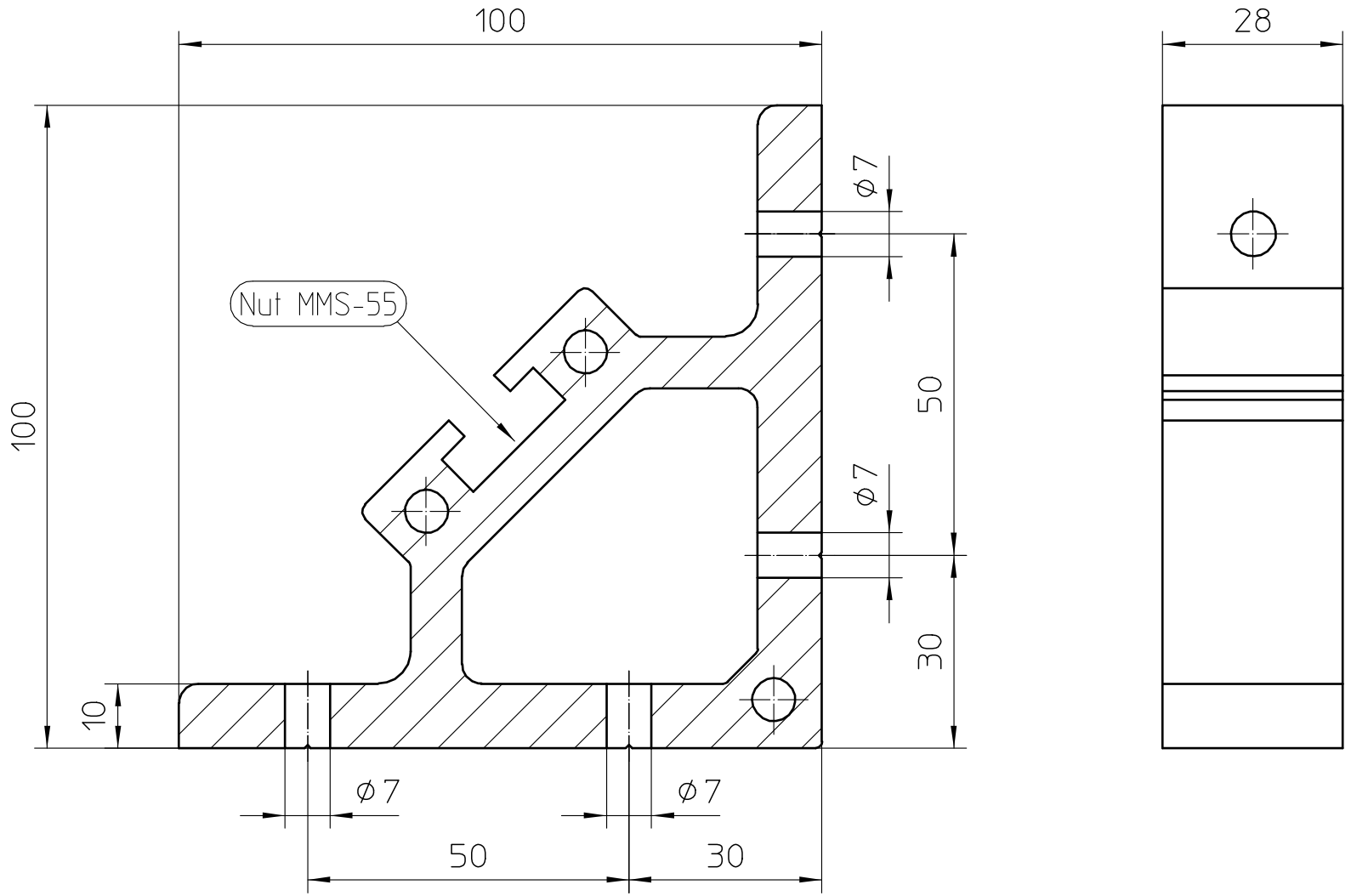

Schraube-Anziehmoment	M8x1,25 (8.8)	25,0 Nm	Schraube-Anziehmoment	M5x0,8 (8.8)	5,9 Nm
Schraube-Anziehmoment	M6x1,00 (8.8)	10,0 Nm	Schraube-Anziehmoment	M4x0,70 (8.8)	3,0 Nm

33.0215	Haltewinkel-MMS-33	100x100x28mm

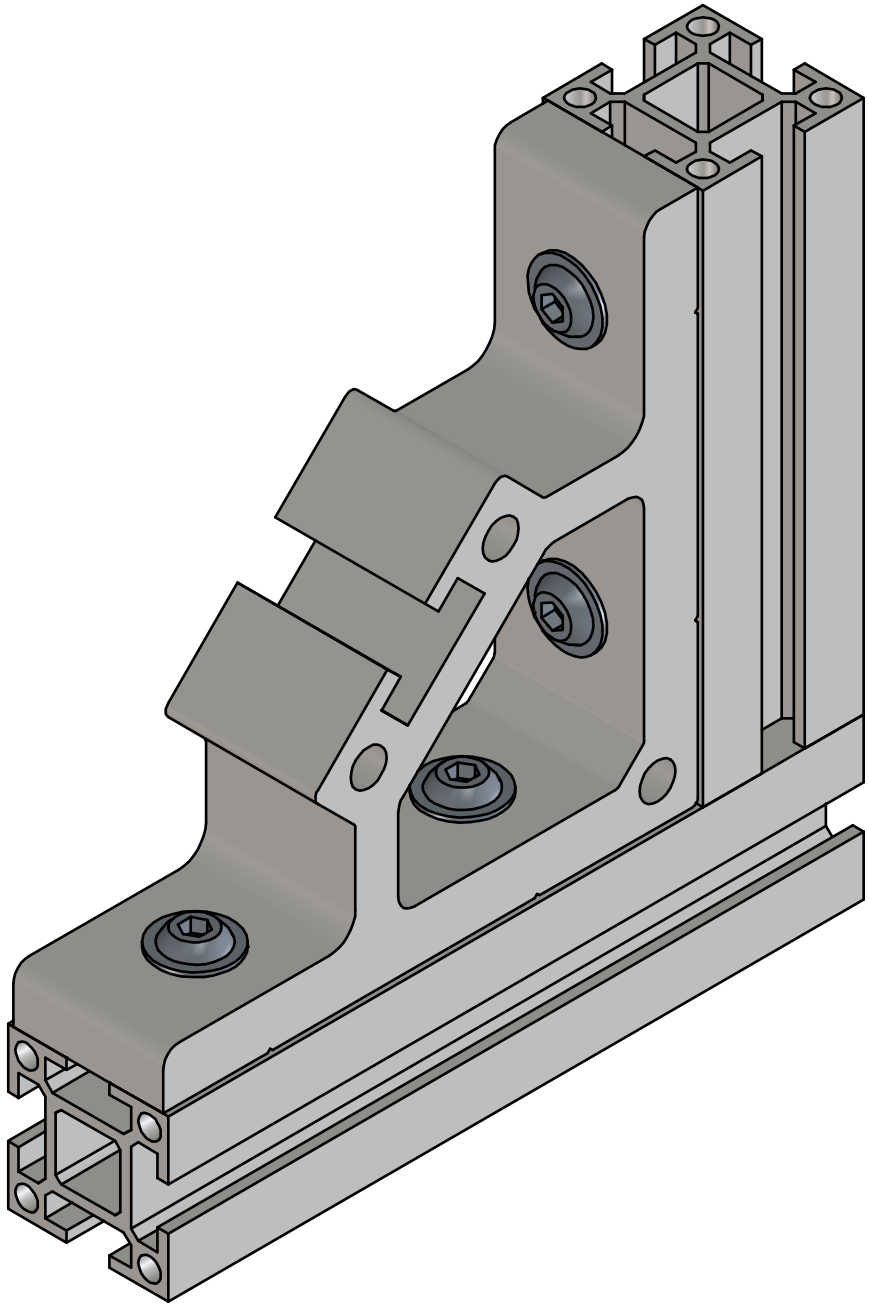

33.0215	Haltewinkel-MMS-33	100x100x28mm